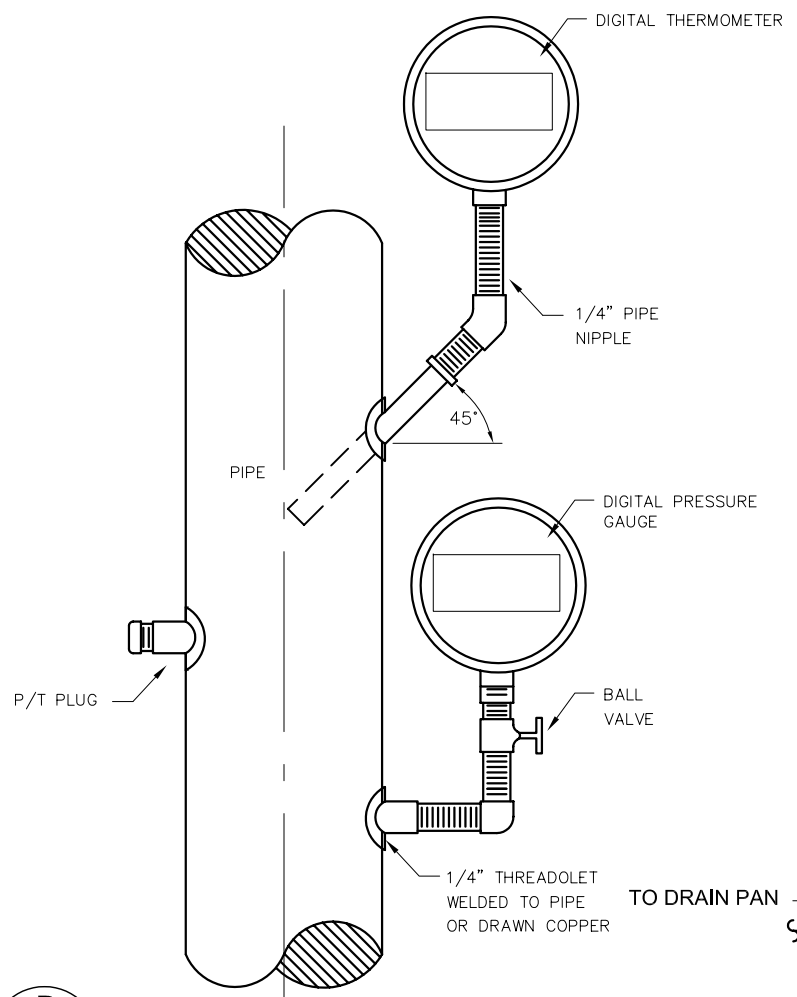

D / M-4 PIPING FLOW SCHEMATIC
N.T.S

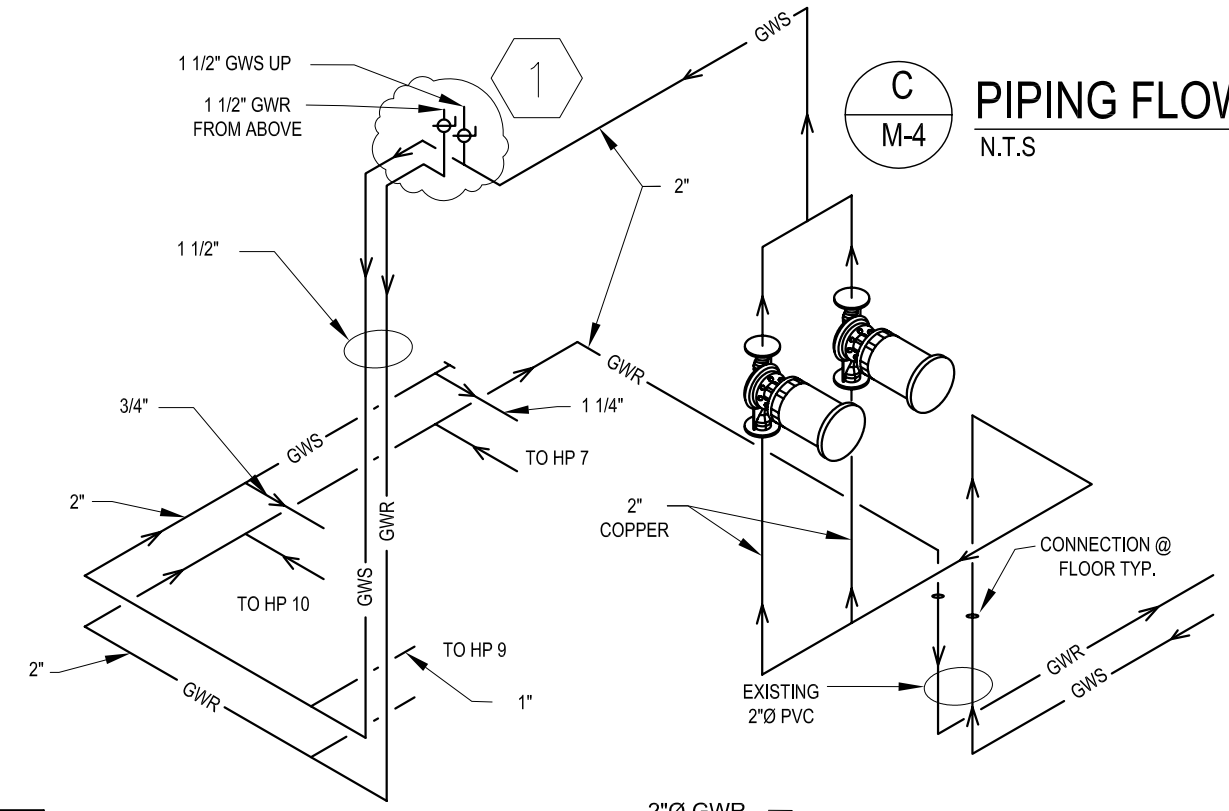

C / M-4 PIPING FLOW SCHEMATIC
N.T.S

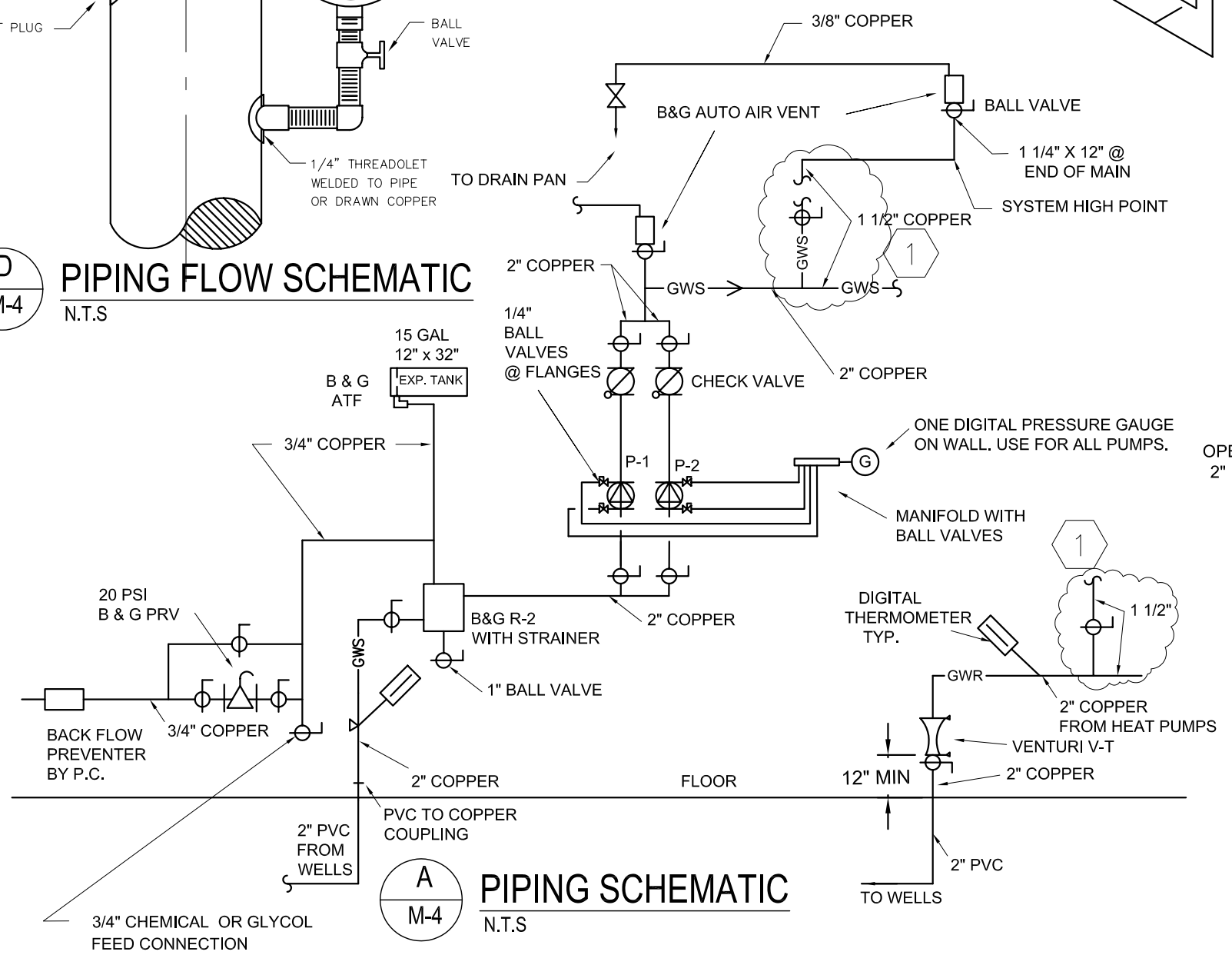

A / M-4 PIPING SCHEMATIC
N.T.S

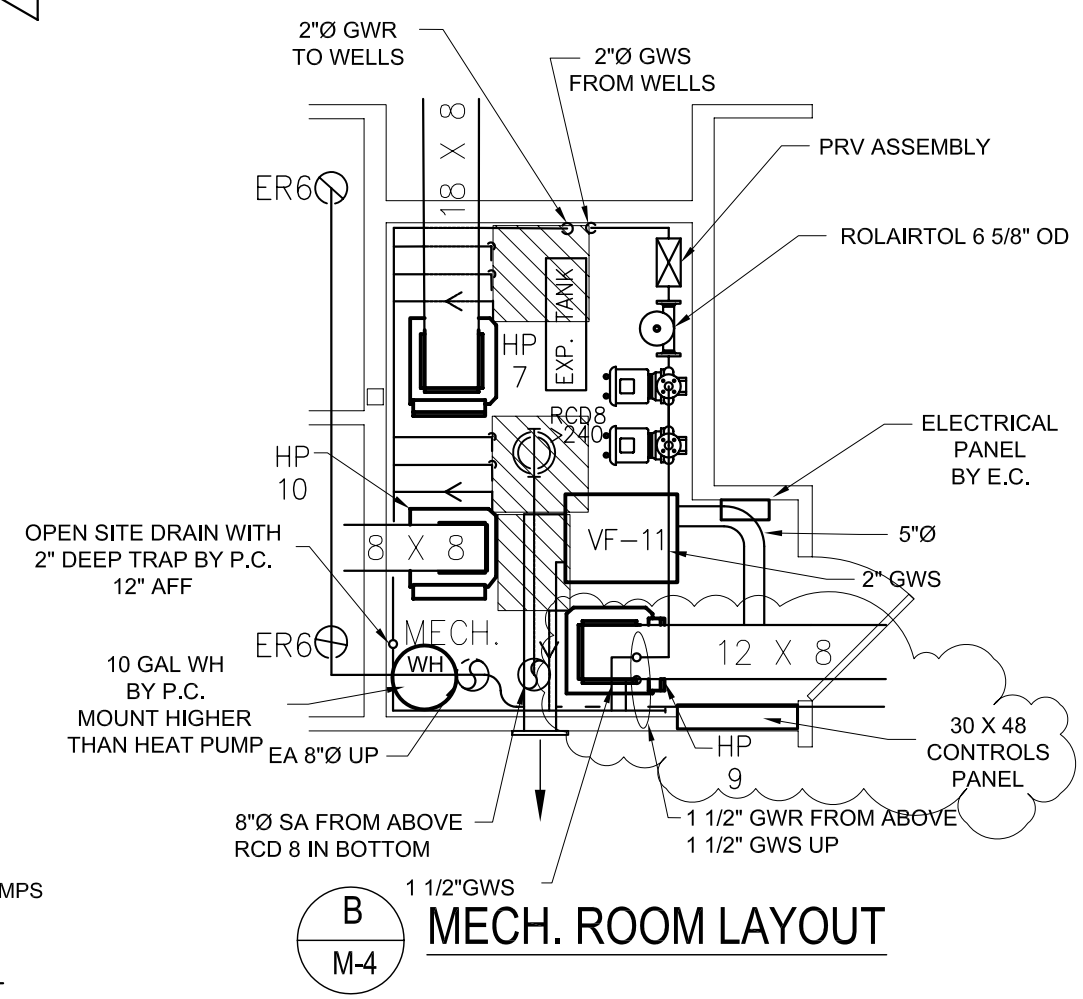

B / M-4 MECH. ROOM LAYOUT

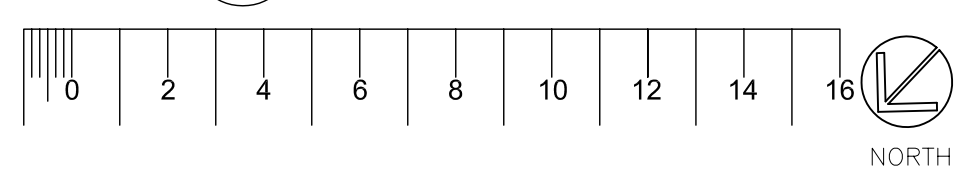

CONSTRUCTION NOTES:

12. INSULATE OA & SA FROM HEAT PUMPS WITH 2" WRAP

2/16/05	ADDENDUM # 3	
1/25/05	CHANGE ORDER 1	1
12/17/04	FOR CONSTRUCTION	
11/22/04	FOR FINAL REVIEW	
11/15/04	FOR REVIEW	
11/12/04	FOR REVIEW	
9/03/04	FOR REVIEW	
6/24/04	FOR REVIEW	
6/08/04	OWNERS REVIEW AND ARCHITECT COORDINATION	

DRAWINGS ISSUED © 2004

DRAWN: JORDAN 3/18/2004
DESIGN: BISESI 3/17/2004
APVD:

PHILIP J BISESI, PE
PH: 828/232-2025
FAX:828/232-1725
EMAIL: eng@affilce.com
AFFILIATED CONSULTANTS, ENGINEERS
70 WOODFIN PLACE, SUITE 210
ASHEVILLE, NC 28801

STEPHENS SMITH FARRELL ARCHITECTURE
17 ZILLICOA STREET ASHEVILLE, NC 28801

WARREN WILSON COLLEGE
COLLEGE RELATIONS OFFICE BUILDING

MECH RM & PIPING SCHEMATIC

DRAWING:
M-4